| 卷册检索号<br>SEARCH NO. OF THE VOLUME |
|---|
| MLHVDC-LCS-ECI-DD-EC-0506<br>30-B003701S-D0506 |



# 图纸文件目录（首页）

CATALOG OF DRAWING DOCUMENTS (HEAD PAGE)

拉合尔±660kV换流站 工程 施工图 阶段
±660kV Lahore Converter Station PROJECT Detail Design DESIGN STAGE

电气 专业 第 05 卷 第 06 册
Electrical SPECIALITY VOLUME 05 BOOK 06

卷册名称 400V站用电室建筑电气
Volume name 400V station service house Electrical

| | |
|---|---|
| 批 准<br>APPROVED BY | |
| 审 核<br>REVIEWED BY | |
| 设计/勘测<br>DESIGNED BY/ SURVEYED BY | |
| 图 纸 8 张<br>DRAWING 8 NOS. | 打印件 本<br>PRINTED COPIES NOS. |

| 序号<br>No. | 图 号<br>DRAWING NO. | 文 件 名 称<br>DOCUMENT TITLE | 版本<br>EDITION | 张<br>NOS. | 本<br>NOS. | 备注<br>REMARKS |
|---|---|---|---|---|---|---|
| 1 | 30-B003701S-D0506-001 | 电气设计施工说明及图例一<br>Electrical design construction instructions and legend 1 | A | 1 | | |
| 2 | 30-B003701S-D0506-002 | 电气设计施工说明及图例二<br>Electrical design construction instructions and legend 2 | A | 1 | | |
| 3 | 30-B003701S-D0506-003 | 遥视照明回路图、配电箱系统图、电力干线图及SPD分布图<br>The viewing lighting circuit diagram、 power distribution system diagram、electric power main line 、diagram and SPD distribution diagram | A | 1 | | |
| 4 | 30-B003701S-D0506-004 | 电气平面图<br>Electrical plan | A | 1 | | |
| 5 | 30-B003701S-D0506-005 | 屋顶防雷平面图<br>Roof lightning protection plan | A | 1 | | |
| 6 | 30-B003701S-D0506-006 | 基础接地平面图<br>foundation earthing plan | A | 1 | | |
| 7 | 30-B003701S-D0506-007 | 弱电平面图及图例<br>Weak current plan and Weak current legend | A | 1 | | |
| 8 | 30-B003701S-D0506-008 | 材料表<br>Material list | A | 1 | | |

注:

# 电气设计施工说明及图例一

## Electrical design construction instructions and legend 1

一、项目概况:
First: Project overview

项目名称: 巴基斯坦默蒂亚里—拉合尔±660kV直流输电工程/拉合尔±660kV换流站
Project name: ±660kV HVDC Project from Matiari to Lahore in Pakistan

建设单位: 国家电网/中国电力技术装备有限公司
Development organization: State Grid / China Electric Power Equipment And Technology CO .TD

本次出图范围为400V站用电室
Design scope: 400V station service house

| 单体名称 Name | 建筑层数 Building Storey | 建筑高度 Height | 建筑面积 Area | 室内外高差 Altitude intercept |
|---|---|---|---|---|
| 400V站用电室 400V station service house | 1 | 5.65m | 125.1m² | 0.45m |

二、设计依据
Second: Design basis

1、其它专业提供的相关资料
1. Relevant information provided by other majors

2、有关规范:
2. About the specification

三、设计内容
Third: Design content

1、本卷册设计内容包括; 低压配电系统; 电力、照明系统; 防雷接地系统; 通信网络系统;

1、This volume content including: Low voltage distribution system; Power and lighting system; Lightning protection earthing system; Communication system;

2、本工程各配电总箱的上级配电及其进线详见其他卷册, 本次设计只负责各配电总箱进线电缆后的相关设计。
2、In this project, the superior distribution and incoming line of the total engineering power distribution box is shown in the other volumes, this design only responsible for the power distribution design after the incoming line of total distribution box.

3、400V站用电室的配电设计详见其他卷册. 逆变器配电设计详见其他卷册
3、The distribution design of 400V station service house is shown in the other volume.
The distribution design of the inverter is shown in the other volume.

四、供配电系统
Fourth: Design content

1、本工程由400V站用电室配电屏引380/220V低压电源经电缆沟敷设至普通照明总箱J5AL1及暖通动力总箱J5AP1中.
由逆变器(逆变器的位置由上级配电设计确定)引220V低压电源经电缆沟敷设至备用照明总箱J5AEL1.

1、In this project, the 380/220v low voltage power is led to the General lighting total distribution box J5AL1 and the General hvac distribution box J5AP1 from 400V station service house distribution cabinet by led in the cable trench.
Then the 220v low voltage power is led to the Standby lightingtotal distribution box J5AEL1 from the inverter.
(the position of inverter is is determined by superior distribution design) by led in the cable trench.

2、本工程设备负荷为三级。
2、The equipment's load level in this project is three-level.

3、配电采用放射式配电方式, 由分别由普通照明总箱, 普通动力总箱, 备用照明总箱出线至各末端设备。
3、Distribution adopts radio-type power distribution, the line are led to equipment from the General lighting total distribution box the General power distribution box and the Standby lightingtotal distribution box.

五、导线选择与敷设
Fifth: Wire selection and installation

1. 导线选择
1. Conductor choice

除图中已标注外, 普通照明、动力支线选用BV-450/750型2.5平方毫米铜芯线。
Except marked in the drawing, the lighting and power wires are selected the BV-450/750 type that its copper wire is 2.5mm².
备用照明、应急及疏散指示照明导线均采用耐火导线N-BV-450/750型2.5平方毫米铜芯线。
both emergency evacuation lighting and Standby lightingwires are used fire-resistant wire N-BV-450/750type that its copper wire is 2.5mm².

2. 敷设方式
2. The system of laying

所有建筑物内出墙至室外的埋管均应采用镀锌钢管(镀锌钢管敷设壁厚大于2.0mm), 如户内配电箱, 弱电箱引至户外电缆沟或电缆井的预埋管等
All the buried pipes that is laid out of buildings should be threaded by galvanized welded steel pipe(the pipe's wall thickness is greater than 2.0mm) to project, Such as the buried pipe that is laid from the Power distribution box or weak box indoor to the outdoor Cable hand wel or cable trench
除图中已标注外, 普通照明、动力、弱电分支线于墙内或混凝土内暗敷时穿阻燃型PVC管, 要求选用中型及以上管材, 半硬质(壁厚大于1.5mm), 在吊顶、活动地板等明敷场所仍要求采用镀锌钢管或金属槽盒(镀锌钢管敷设壁厚大于1.5mm);
Except marked in the drawing, when the general lighting、power、weak current wires is laid inside the wall or the concrete it can be threaded by flame retardant PVC pipe and it should choose medium and above semi-rigid tubing(the PC pipe's wall thickness is greater than 1.5mm).
And when it is laid in place such as condole top, activity floor where it should be exposed laying, it should be threaded by galvanized welded steel pipe (the pipe's wall thickness is greater than 1.5mm) to project.

当线路采用PVC导管敷设时, 当其当穿过建筑物基础时, 应加保护管保护; 当穿过建筑物变形缝时, 应设补偿装置。刚性塑料导管暗敷或埋地敷设时, 引出地(楼)面的管路应采取防止机械损伤的措施。
If the line is threaded by PVC pipe, the protective tube protection shall be added when it passes through the building foundation; Compensation devices shall be installed when passing through the deformation joints of buildings. When the rigid plastic catheter is concealed or buried under the ground, the piping out of the ground (floor) shall be taken to prevent mechanical damage.

除图中已标注外, 备用照明、应急疏散照明线线路均穿镀锌钢管敷设(壁厚大于1.5mm)
Except marked in the drawing the emergency evacuation lighting and Standby lightingwires are threaded by galvanized welded steel pipe(the pipe's wall thickness is greater than 1.5mm) to project.

备用照明、应急疏散照明线路暗敷设时, 应采用耐火导线, 暗敷在不燃烧体结构内, 其保护层厚度不应小于30mm;
When the emergency evacuation lighting and Standby lighting circuit is laid by concealed laying in the construction, it must use the Fire-resistant wire.
And the construction must be Non-combustible component, and its protective thickness shall not be less than 30mm;

明敷时, 应穿金属管或金属线槽, 并应采取防火保护措施。为消防设备供电的线路则采用阻燃耐火导线。
When the fire power circuit and the emergency lighting circuit is laid by exposed laying, it must be laid in galvanized welded steel pipe or metal trunking, and the fire protection measures should be taken. The wires power supply to the fire equipment must use the fire - retardant and fire-resistant wire.

所有布线埋管均需在转弯处设置弯头, 转弯半径不小于15倍电线式电缆外径。
All wiring must be setted the elbow, at the corner, and the turning radius is not less than 15 times wire cable diameter

六、节能
sixth: Energy saving

1. 荧光灯灯具的效率
1. The fluorescent lamp lunminaire efficiency

| 灯具出光口形式 the light outlet from of the lunminaire | 开敞式 open type | 保护罩(玻璃或塑料) protection cover (glass or Hard plastic) 透明 Transparent | 磨砂、棱镜 frosted、prism | 格栅 grille |
|---|---|---|---|---|
| 灯具效率 lunminaire efficiency | 75% | 70% | 55% | 65% |

3. 本工程采用节能吸顶灯及荧光灯, 照明光源的显色指数(Ra)不小于80。所有荧光灯镇流器要求采用节能型电子式, 单灯功率因数不小于0.9, 采用的镇流器应满足国家能耗标准。
3. This project use the Energy - saving ceiling lamps and fluorescent lamps, the colour rendering index(Ra) of the lighting source should be not less than 80. All the fluorescent lamps must use the energy-saving electronic ballast, the single-lamp power factor is not less than 0.9, and the ballast used should meet the national energy standards.

七、设备安装
seventh: equipment installation

1. 潮湿场所内灯具采用防水防尘型。
1. The lamp in the damp places uses Waterproof and dustproof type

疏散标志灯嵌墙安装, 下沿距地0.5米, 安全出口标志灯嵌墙安装, 门框上0.1米。其余灯具见平面标注或图例说明。
The escape sign lamp should be embedded wall installation, its lower edge is apart from the ground 0.5 meters
The exit sign lamp should be embedded wall installation, and it is apart from the top of the door 0.1 meters
The Installation of other lamps is shown in the graphic annotation or illustration instructions.

2. 照明、动力配电箱(柜)安装方式及高度参见系统图。
2. The installation mode and height of the lighting or power distribution box (cabinet) is shown in the system diagram.

3. 照明开关嵌墙暗装, 排风机启停按钮明装, 距地1.3米, 面板边沿离门框内边距离为0.15米。
3. The lighting switch is concealed installed in the wall, the Rev. Stop button of exhaust fan is open installed, and it is apart from the ground 1.3 meters, the edge of the pane it is apart from the inside edge of the door 0.15m.
插座均嵌墙暗装, 距地0.3米。电源插座与信息插座保持0.3米间距。
The sockets are all concealed installed in the wall, and they are apart from the ground 0.3m. The power socket and the information socket are spaced at 0.3m

4. 公共部位的配电设备及弱电设备均嵌墙安装, 下沿距地1.5m; 各电话、信息、电视插座均暗装, 采用安全型插座。
4. The power distribution equipment and the weak current equipment in the public place should be concealed installed in the wall, and its lower edge is apart from the ground 1.5 meters; The telephone、information and TV sockets are concealed installed in the wal, and they should be use safety socket.

八 防雷接地设计说明.
eighth: Design description of lightning protection and eatthing.

1. 屋面采用热镀锌圆钢Ø12明敷作为接闪带, 组成不大于20mX20m或24mX16m接闪网格。所有高出屋面的各种金属构件均须与接闪带焊接连通。
1. Using hot dip galvanized round steel (Ø12) as the exposed laying air-termination system on the roof, and making up the air-termination system grid on the roof which size is not bigger than 20m*20m or (24m*16m). All metal components above the roof must be welded to the air-termination system.
采用热镀锌扁钢(50*6)作为防雷引下线, 沿墙柱暗敷, 引至接地干线。引下线沿建筑四周均匀布置, 间距不应大于20m。
Using the hot galvanizing flat steel(50*6) as lighting protection down-conductor system, and it is led to the earth-termination system by being laid in the wall or column. The down-conductor system should be set spread evenly around the building, and its spacing should not be greater than 20m.
本工程采用环房暗敷接地线为主接地网, 接地电阻应小于1欧姆, 具体设计详见其他卷册。
This project's main earth-termination system is buried underground around the building, the earthing resistance should be less than 1 ohm, and The detailed designs is shown in the other volume.

2. 强电电源进线及弱电电源进线处等电位具体做法详见图集08D800-8《民用建筑电气设计与施工》-P123
2. Equipotential practices and requirements of place where the power supply line and weak current power supply line enter to the duilding refer to the atlas 08D800-8《Electrical design and construction of civil buildings-lightning protection and earthing》-P123
所有进出建筑物的金属管道(包括垂直管道)、建筑物内的水管、采暖和空调管道等各种金属干管、建筑物金属结构部分等应作等电位联接。
具体做法参照图集《等电位联结安装》15D502和图集08D800-8《民用建筑电气设计与施工》
All metal pipes in and out of buildings (including vertical pipes)、various metal pipes, such as water pipe, heating and air conditioning pipe and metal structure part of the building Should be done equal potential connection, The specific practice refer to the atlas
《Equal potential connection installation》15D502 and atlas 08D800-8
《Electrical design and construction of civil buildings-lightning protection and earthing》

3. 为过防止电压对电气设备造成的损害, 在各级低压电源进线处将设置防过压的电涌保护器。在室外进户的通信电缆以及同轴电缆上设置信号浪涌保护器。
3. To prevent the damage for electrical equipment caused by voltage, the Surge protection Device should be set where all levels of low voltage power supply enter the building. The communication cable and coaxial-cable should be set with signal Surge protection Devic.

Reference Drawings

| Drwg. No. | Title |
|---|---|
| | |

Revisions

| | Name | Date | Notes |
|---|---|---|---|
| | | | |

巴基斯坦默蒂亚里—拉合尔±660kV直流输电工程
±660kV HVDC Project from Matiari to Lahore in Pakistan

NATIONAL TRANSMISSION & DESPATCH COMPANY (NTDC) LIMITED PAKISTAN

CONTRACTOR 国家电网 STATE GRID 中国电力技术装备有限公司 CHINA ELECTRIC POWER EQUIPMENT AND TECHNOLOGY CO.,LTD.

SUBCONTRACTOR East China Electric Power Design Institute Co.,Ltd.

拉合尔±660kV换流站
±660kV Lahore Converter Station

设计阶段 PHASE: 施工图 Detail Design

M L H V D C - L C S - E C I - D D - E C - 0 5 0 6 - 0 0 1 A

| | 姓名 | 日期 |
|---|---|---|
| 设计 Designed | | 2018.2.8 |
| 校核 Checked | | 2018.2.8 |
| 审核 Reviewed | | 2018.2.8 |
| 批准 Approved | | 2018.2.8 |
| 比例 Scale 1:100 | 图号 DWG NO. | 30-B003701S-D0506-001 |

电气设计施工说明及图例一
Electrical design construction instructions and legend 1

版本 REV. A

594X841

# 电气设计施工说明及图例二

## Electrical design construction instructions and legend 2

4. 其余要求详见接地平面图及屋顶防雷平面图。

4. The other requirements are shown in the earthing plan and Roof lightning protection plan.

5. 施工及验收请参照国标图集15D501、15D502、15D503、14D504、08D800-8相关页次。

5. Construction and acceptance, please refering to the standard atlas 15D501、15D502、15D503、14D504、08D800-8.

6. 接地装置施工过程中，电气安装单位应与机电安装单位在现场密切配合，所有隐蔽工程均需现场验收，桩位具体尺寸详见结施图.

6. During the construction of earth-termination system,the electrical installation unit shall cooperate closely with the civil construction units in the field. All concealed works shall be subject to on-site acceptance,The detailed dimensions of pile position are shown in the pape structural drawings.

九、建筑机电工程抗震措施：

ninth.Building mechanical and electrical engineering anti-seismic measures:

1. 当采用硬母线敷设且直线段长度大于80m时，应每50m设置伸缩节；在电缆桥架、电缆槽盒内敷设的缆线在引进、引出和转弯处，应在长度上留有余量；接地线应采取防止地震时被切断的措施。

1.When the hard bus line is used and the length of the line segment is greater than 80m,The telescopic section should be set every 50m. It should be left with a residual amount in the length when the cable lines are introduced in , introduced out and turned around in cable bridge and cable tray. The grounding line shall take measures to prevent the earthquake from being cut off.

2. 缆线穿管敷设时宜采用弹性和延性较好的管材。

2.The cable tube shall be well equipped with good flexibility and ductility.

3. 引入建筑物的电气管路敷设时应符合下列规定：a）在进口处应采用绕性线管或采取其他抗震措施；b）当进户井贴邻建筑物设置时，缆线应在井中留有余量；c）进户套管与引入管之间的间隙应采用柔性防腐、防水材料密封。

3.The installation of electrical pipes being led to the buildings shall meet the following requirements: a) the winding tube should be used in the import department or adopt other seismic measures;b) the cable shall have a residual amount in the well when it is installed in the adjacent building;c) the gap between the inlet casing and the pipe should be sealed with flexible anticorrosion and waterproof material.

4. 电气管路不宜穿越抗震缝，当必须穿越时应符合下列规定：a）采用金属导管、刚性塑料导管敷设时宜靠近建筑物下部穿越，且在抗震缝两侧应各设置一个柔性管接头；b）电缆梯架、电缆槽盒、母线槽在抗震缝两侧应设置伸缩节；c）抗震缝的两端应设置抗震支撑节点并与结构可靠连接。

4.The electric pipe shall not be used to cross the aseismic joint, and shall meet the following requirements when crossing: a）when use metal ducts and rigid plastic catheters it should be close to the lower part of the building and a flexible pipe joint shall be installed on both sides of the aseismatic joint. b）cable ladder, cable tray and busbar shall set expansion joints on both sides of the aseismatic joint. c）anti-seismic support nodes should be set at both ends of earthquake joints and reliable connections with the structure.

5. 电气管路敷设时应符合下列规定：a）当线路采用金属导管、刚性塑料导管、电缆梯架或电缆槽盒敷设时，应使用刚性托架或支架固定，不宜使用吊架，当必须使用吊架时，应安装横向防晃吊架；b）当金属导管、刚性塑料导管、电缆梯架或电缆槽盒穿越防火分区时，其缝隙应采用柔性防火封堵材料封堵，并应在贯穿部位附近设置抗震支撑；c）金属导管、刚性塑料导管的直线段部分每隔30m应设置伸缩节。

5.Electrical piping shall be laid in accordance with the following provisions: a) when the wires are used ducts, rigid plastic conduits, cable ladders or cable tray boxes to led it should use rigid bracket or bracket to fix, unfavorable use condole frame, when it must use condole, should install transverse anti-sway condole frame; b) when metal ducts, rigid plastic pipe, cable ladder or cable tray through the fire zone, the gap should adopt flexible fireproof plugging material block, and should be set near the throughout the site aseismatic support; c) the straight-line segment of the metallic conduit and rigid plastic catheter should be set with a telescopic section every 30m.

十、其它

tenth: others

1. 各用电设备出线口位置请配合水施、风施有关专业图纸进行施工定位。

1. The position of the outlet of each electrical equipment shall be confirmed by cooperating with the related professional drawings like water profession and hvac profession.

2. 线路长度过长时应遵照相关施工规范增加过路接线盒。

2. If the length of the circuit is too long, the connection box should be added by complying with related construction specifications

3. 配电间内安装完毕后，楼板缝隙处需做防火封堵。

3. When the distribution room is constructed finish,the floor cracks should be fireproof sealing.

4. 其它未提之处均参照地方相关施工安装法规。

4. Other unmentioned places shall refer to local construction and installation regulations

5. 本卷册设计以中文部分为主，英文部分仅作参考。

5. This volume is mainly designed in Chinese, and the English part is for reference only

6. 本单体火灾报警系统，工业电视监控系统、呼叫系统的管线预埋及开列，详见各系统卷册。

6. Pipeline embedded and pipeline's material list of Weak current system、Industrial television monitoring system、fire alarm system and call system in this building should be shown in volume of each system .

7. 通信网络系统相关说明详见卷册：30-B003701S-D0301~30-B003701S-D0305.

7.The related instructions of Communication system is shown in the volume: 30-B003701S-D0301~30-B003701S-D0305.

8. 配电箱、配电盒、照明灯具、插座、开关面板均应按招标文件要求采用质量可靠，性能稳定的产品，符合巴基斯坦当地的使用习惯，且全站要统一品牌，由总包，监理统一批准。需注意，空调、热水器、洗衣机等用电器的插座需与对应电器匹配

8. Distribution box, power distribution box, lighting, socket, switch panel shall be in accordance with the tender documents require it should use the product which is reliable quality, stable performance and it is in accordance with local practices in Pakistan, And the whole station should unify the brand, and it should be unified approvalled by the total package and the supervision . The electrical socket of air conditioning, water heater and washing machine should be matched with the corresponding electrical appliances

| 敷设方式 system of laying | | 穿管型号 the pipe type | |
|---|---|---|---|
| CC | 沿顶板暗敷 hidden laying in the apical plate | RC | 镀锌钢管 galvanized welded steel pipe |
| WC | 沿墙暗敷 hidden laying in the wall | PC | 阻燃型塑料导管 Flame retardant plastic catheters |
| FC | 沿地面暗敷 hidden laying in the floor | | |
| MR | 沿金属线槽敷设 laying in the metal trunking | | |

| 燃烧特性 Combustion characteristic | | 电线电缆规格 Wire and cable specifications | |
|---|---|---|---|
| ZRB- | B级阻燃 the class B Flame retardant | BV- | 聚氯乙烯绝缘电线 polyvinil chloride insulated wire |
| N- | 耐火 fire-resistant | | |

注：

note:

1、插座按中国标准开列。

1、Socket list by China standard

| 图例 legend | 设备名称 Equipment name | 型号及规格 Model and specification | 安装方式 Installation |
|---|---|---|---|
| | 照明配电箱 lighting distribution box | | 详见系统图 See the system diagram |
| | 照明配电箱 lighting distribution box | | 详见系统图 See the system diagram |
| | 暖通配电箱 hvac distribution box | | 详见系统图 See the system diagram |
| | 出口指示灯 exit sign lighting | 光源LED 3W（自带蓄电池） light source: LED 3w（Built-in battery） | 门洞上方0.1m（应急时间不小于120分钟） From the top of the door 0.1 m The emergency time is not less than 120 minutes |
| | 方向指示灯 escape sign lighting | 光源LED 3W（自带蓄电池） light source: LED 3w（Built-in battery） | 下口距地0.5m（应急时间不小于120分钟） its lower edge isapart from the ground 0.5 m The emergency time is not less than 120 minutes |
| | 单管荧光灯 single tube fluorescent lamp | 32W 配电子镇流器 Electronic ballast | 管吊线槽内安装，距地2.8m to be installed in the tube of messenger wire groove from the ground 2.8 m |
| | 双管荧光灯 double tube fluorescent lamp | 2 x 32W 配电子镇流器 Electronic ballast | 管吊线槽内安装，距地2.8m to be installed in the tube of messenger wire groove from the ground 2.8 m |
| | 吸顶灯（防水型） Suction lamp（waterproof type） | 1*18W | 吸顶 Suction |
| | 遥视灯控箱 viewing light control box | 300x250x150 | 暗装，下口距地 1.5m concealed installation, its lower edge isapart from the ground 1.5 m |
| E | 表示备用照明 mean Standby lighting | 一般应急时间≥120min emergency time≥120 min | |
| EX | 表示防爆 mean Explosion proof | | |
| D | D表示灯自带蓄电池 D means Built-in battery | 自带蓄电池一般应急时间≥180min Built-in battery general emergency time≥180 min | 平时及应急时就地可控 In normal times and emergency times, it is in situ controllable |
| | 壁灯 Wall lamp | 36W | 距地3.0m 壁装 installed on the wall its lower edge isapart from the ground 3.0 m |
| | 插座（三相四极安全型） socket （Three-phase quadrupole safety type） | 380V,16A | 暗装，下口距地 0.3m concealed installation, its lower edge isapart from the ground 0.3 m |
| | 二、三极单相组合插座（安全型） The diode triode single phase combinated socke（safety type） | 250V,10A | 暗装，下口距地 0.3m concealed installation, its lower edge isapart from the ground 0.3 m |
| | 柜式空调插座（三相四极安全型） The Cabinet air-conditioner socket （Three-phase quadrupole safety type） | 380V,16A | 暗装，下口距地 0.3m concealed installation, its lower edge isapart from the ground 0.3 m |
| F | 风机接线盒 Fan terminal box | 380V 10A | 暗装，下口距地 3.4m concealed installation, its lower edge isapart from the ground 3.4 m |
| | 应急灯 emergency lamp | 2*23W（自带蓄电池） 2*23W（Built-in battery） | 距地2.5m（应急时间不小于120分钟） its lower edge isapart from the ground 2.5 m The emergency time is not less than 120 minutes |
| | 单联单控开关 single connection planet single control switch | 250V,10A | 暗装，下口距地 1.3m concealed installation, its lower edge isapart from the ground 1.3 m |
| | 双联单控开关 two connection planet single control switch | 250V,10A | 暗装，下口距地 1.3m concealed installation, its lower edge isapart from the ground 1.3 m |
| | 双联双控开关 two connection planet double control switch | 250V,10A | 暗装，下口距地 1.3m concealed installation, its lower edge isapart from the ground 1.3 m |
| | 单联双控开关 single connection planet double control switch | 250V,10A | 暗装，下口距地 1.3m concealed installation, its lower edge isapart from the ground 1.3 m |
| | 单联单控开关(IP54安全型) single connection planet single control switch（IP54 safety type） | 250V,10A | 暗装，下口距地 1.3m concealed installation, its lower edge isapart from the ground 1.3 m |
| | 双联单控开关(IP54安全型) two connection planet single control switch（IP54 safety type） | 250V,10A | 暗装，下口距地 1.3m concealed installation, its lower edge isapart from the ground 1.3 m |
| LEB | LEB端子板 Local Equipotential Bonding | | 下口距地0.3m its lower edge isapart from the ground 0.3 m |
| | 接地端子盒 earth terminal box | | 下口距地0.3m its lower edge isapart from the ground 0.3 m |
| | 轴流风机控制箱 Axial flow fan control box | | 暗装，下口距地 1.5m concealed installation, its lower edge isapart from the ground 1.3 m |

注：

note:

1、本建筑物空调插座采用国标，公共区域插座国标和巴方标准每房间各安装一半原则实施，最终实施方案以业主及监理要求为准。

1、In this building,the air conditioning socket adopts Chinese standard; the electrical sockets in the public areas and each room according to the implementation principle that one half adopt Chinese standard and anothet half adopt Pakistani standard ,and the final implementation plan should be subject to the requirements of the owner and the supervisor.

Reference Drawings

| Drwg. No. | Title |
|---|---|
| | |

Revisions

| | Name | Date | Notes |
|---|---|---|---|
| | | | |

巴基斯坦默蒂亚里—拉合尔±660kV直流输电工程

±660kV HVDC Project from Matiari to Lahore in Pakistan

NATIONAL TRANSMISSION & DESPATCH COMPANY (NTDC.) LIMITED PAKISTAN

CONTRACTOR 国家电网 STATE GRID 中国电力技术装备有限公司 CHINA ELECTRIC POWER TECHNOLOGY AND EQUIPMENT CO.,LTD.

SUBCONTRACTOR East China Electric Power Design Institute Co.,Ltd.

拉合尔±660kV换流站

±660kV Lahore Converter Station

设计阶段 PHASE: 施工图 Detail Design

M L H V D C - L C S - E C I - D D - E C - 0 5 0 6 - 0 0 2 A

| | 姓名 | 日期 |
|---|---|---|
| 设计 Designed | | 2018.2.8 |
| 校核 Checked | | 2018.2.8 |
| 审核 Reviewed | | 2018.2.8 |
| 批准 Approved | | 2018.2.8 |

电气设计施工说明及图例二

Electrical design construction instructions and legend 2

比例 Scale 1:100 | 图号 DWG NO. 30-B003701S-D0506-002 | 版本 REV. A

594X841

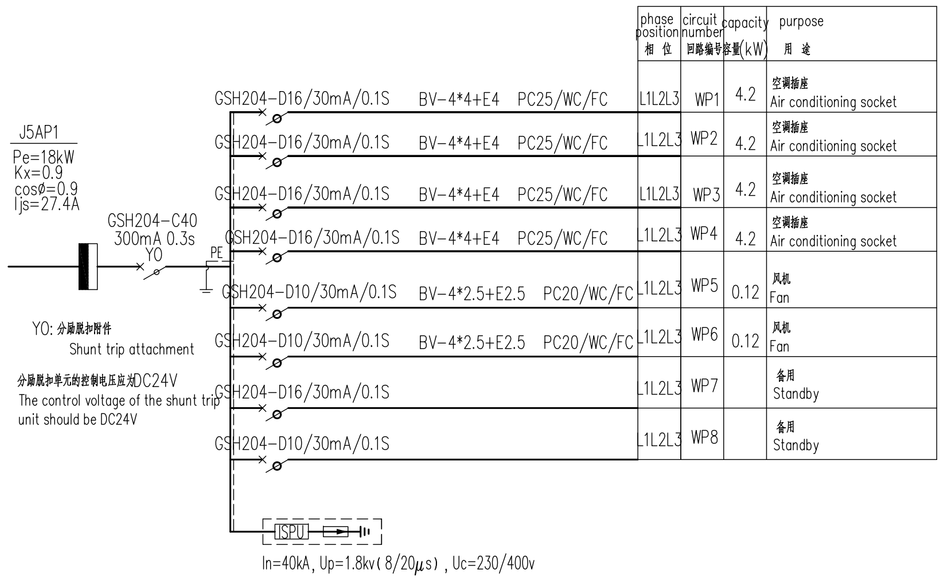


| phase position 相位 | circuit number 回路编号 | capacity 容量(kW) | purpose 用途 |
|---|---|---|---|
| L1L2L3 | WP1 | 4.2 | 空调插座 Air conditioning socket |
| L1L2L3 | WP2 | 4.2 | 空调插座 Air conditioning socket |
| L1L2L3 | WP3 | 4.2 | 空调插座 Air conditioning socket |
| L1L2L3 | WP4 | 4.2 | 空调插座 Air conditioning socket |
| L1L2L3 | WP5 | 0.12 | 风机 Fan |
| L1L2L3 | WP6 | 0.12 | 风机 Fan |
| L1L2L3 | WP7 | | 备用 Standby |
| L1L2L3 | WP8 | | 备用 Standby |

J5AP1 配电系统(power distribution system)

挂墙安装,下皮距地1.5m(Installed on the wall, lower edge isapart from the ground 1.5m)

高*宽*深(Height * width * depth):600*600*100

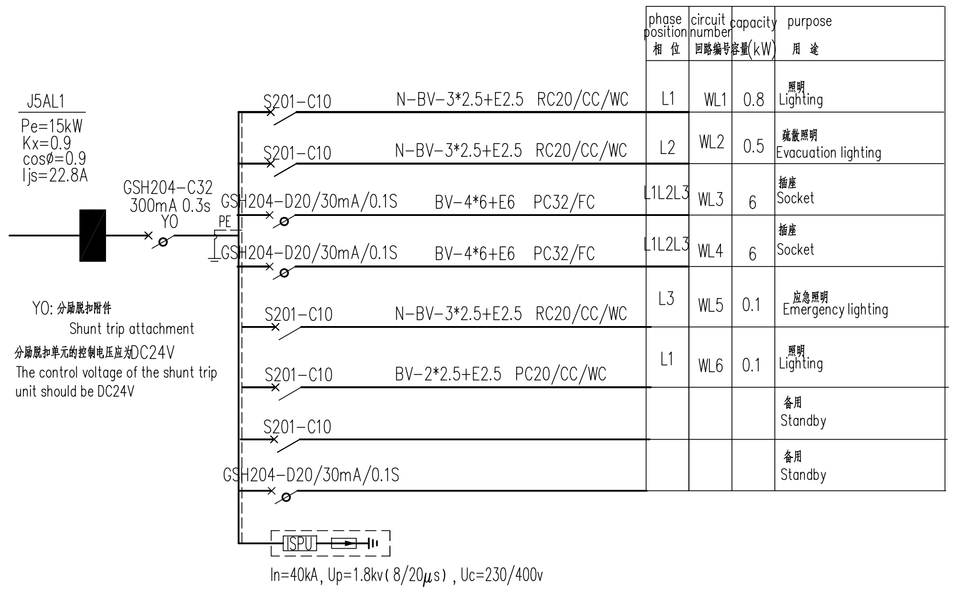


| phase position 相位 | circuit number 回路编号 | capacity 容量(kW) | purpose 用途 |
|---|---|---|---|
| L1 | WL1 | 0.8 | 照明 Lighting |
| L2 | WL2 | 0.5 | 疏散照明 Evacuation lighting |
| L1L2L3 | WL3 | 6 | 插座 Socket |
| L1L2L3 | WL4 | 6 | 插座 Socket |
| L3 | WL5 | 0.1 | 应急照明 Emergency lighting |
| L1 | WL6 | 0.1 | 照明 Lighting |
| | | | 备用 Standby |
| | | | 备用 Standby |

J5AL1 配电系统(power distribution system)

挂墙安装,下皮距地1.5m(Installed on the wall, lower edge isapart from the ground 1.5m)

高*宽*深(Height * width * depth):400*600*100

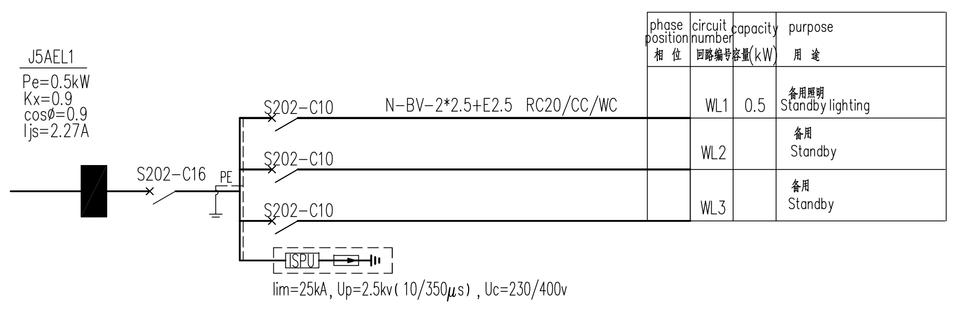


| phase position 相位 | circuit number 回路编号 | capacity 容量(kW) | purpose 用途 |
|---|---|---|---|
| | WL1 | 0.5 | 备用照明 Standby lighting |
| | WL2 | | 备用 Standby |
| | WL3 | | 备用 Standby |

J5AEL1 配电系统(power distribution system)

挂墙安装,下皮距地1.5m(Installed on the wall, lower edge isapart from the ground 1.5m)

高*宽*深(Height * width * depth):400*300*100

注:
note:
各个配电箱体内应单独设置PE排,并应接地。
PE platoon should be set separately in the each power distribution box, and it should be lead to the earthing

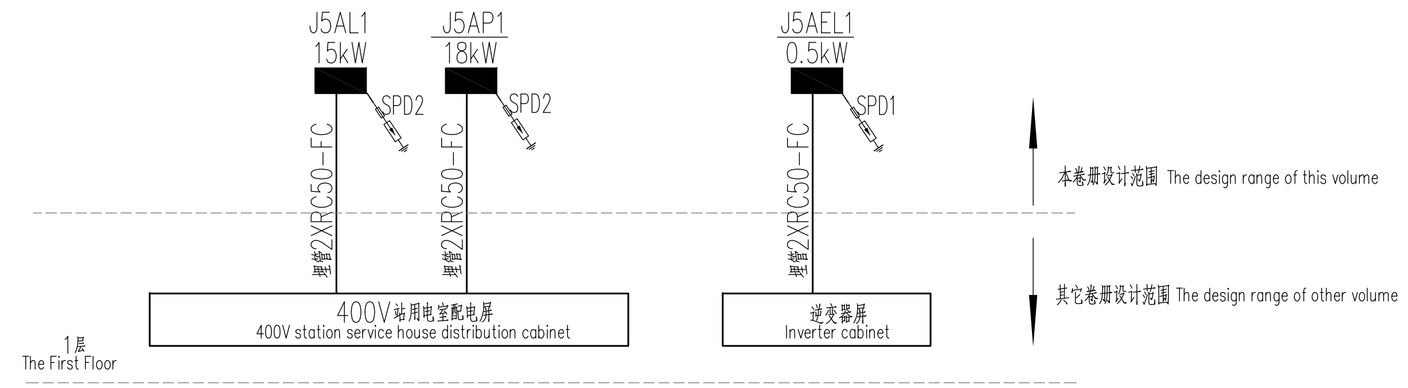


电力干线图及SPD分布图

(Electric power main line diagram and SPD distribution diagram)

注:
note:
1.进线电缆规格由上级配电设计确定
1.Specification of incoming cable is determined by superior distribution design
2.所有配电箱应预留加装接触器的位置。
2.All distribution boxes shall be reserved for loading contacts.

The earthing system: 接地制式 TN-S

Back-up protection device of the front-end of the surge protector: fuse 电涌保护器前端选用的后备保护装置: 熔断器

| parameter 参数 / SPD level SPD级别 | waveform 波形 | In/Iimp | Up | Uc | Wire specifications 引线规格: phase line side 相线端 | Wire specifications 引线规格: earthing line side 接地端 | Installation position 安装位置 | Back-up protection fuse 后备保护熔断器 | wiring mode 接线方式 | The numerical of impact resistance voltage rating 耐冲击电压额定值 Uw |
|---|---|---|---|---|---|---|---|---|---|---|
| SPD1 | 10/350 | Iimp=25kA | 2.5kV | 230/400v | 16(mm²) | 25(mm²) | where the power wire enter and out 电源进、出线处 | 100A | The phase line and neutral line protection mode 相线、中性线对地保护模式 | 6kV |
| | 8/20 | In=80kA | 2.5kV | 230/400v | 16(mm²) | 25(mm²) | The equipment distribution tank 屋面设备配电箱 | 80A | The phase line and neutral line protection mode 相线、中性线对地保护模式 | 4kV |
| SPD2 | 8/20 | In=40kA | 1.8kV~2.0KV | 230/400v | 10(mm²) | 16(mm²) | the floor distribution tank 楼层配电柜 | 50A | The phase line and neutral line protection mode 相线、中性线对地保护模式 | 4kV |

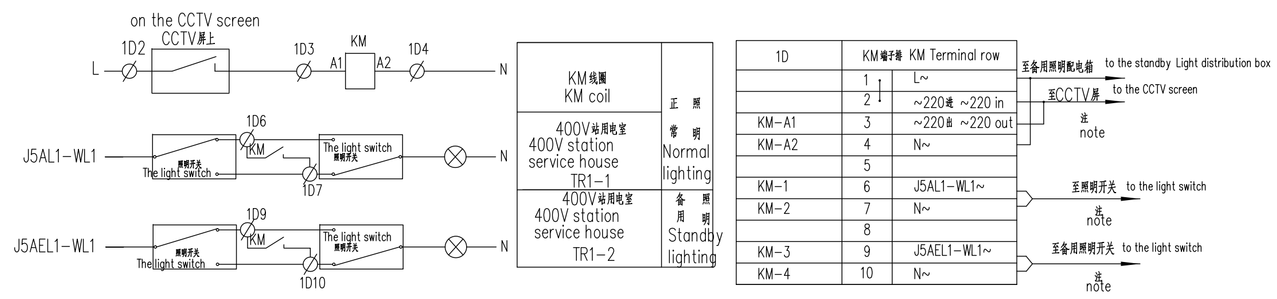


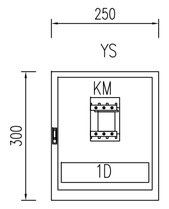


400V站用电室遥视照明回路图

The viewing lighting circuit diagram of 400V station service house

注:该电缆编号及型号详见工业电视监控系统及主要材料清单1.
Note: the cable number and model are detailed in Industrial television monitoring system and the main material list 1.

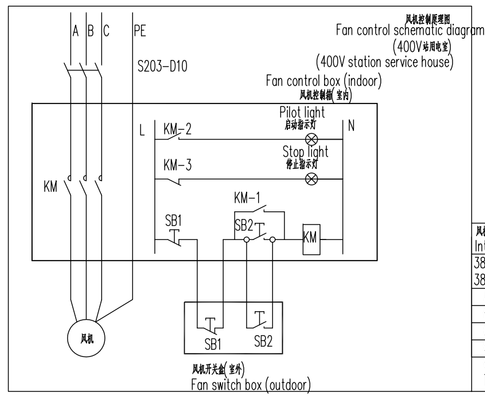


风机控制箱内部材料清单
Internal material list of fan control box

| | |
|---|---|
| 380V接触器(10A) 380V contactor (10A) | 1 |
| 启动按钮 Start button | 2 |
| 停止按钮 Stop button | 2 |
| 红色指示灯 Red indicator | 1 |
| 绿色指示灯 Green indicator | 1 |
| 端子排(12对) Terminal row (12 pairs) | 1 |

注:
note:
各个配电箱体内应单独设置PE排,并应接地。
PE platoon should be set separately in the each power distribution box, and it should be lead to the earthing

Reference Drawings

| Drwg. No. | Title |
|---|---|
| | |

Revisions

| | Name | Date | Notes |
|---|---|---|---|
| | | | |

巴基斯坦默蒂亚里—拉合尔±660kV直流输电工程

±660kV HVDC Project from Matiari to Lahore in Pakistan

NATIONAL TRANSMISSION & DESPATCH COMPANY (NTDC) LIMITED PAKISTAN

CONTRACTOR 国家电网 STATE GRID 中国电力技术装备有限公司 CHINA ELECTRIC POWER EQUIPMENT AND TECHNOLOGY CO.,LTD.

SUBCONTRACTOR East China Electric Power Design Institute Co.,Ltd.

拉合尔±660kV换流站

±660kV Lahore Converter Station

设计阶段 PHASE: 施工图 Detail Design

M L H V D C - L C S - E C I - D D - E C - 0 5 0 6 - 0 0 3 A

| | 姓名 | 日期 |
|---|---|---|
| 设计 Designed | | 2018.2.8 |
| 校核 Checked | | 2018.2.8 |
| 审核 Reviewed | | 2018.2.8 |
| 批准 Approved | | 2018.2.8 |

遥视照明回路图、配电箱系统图、电力干线图及SPD分布图

The viewing lighting circuit diagram, power distribution system diagram, electric power main line, diagram and SPD distribution diagram

比例 Scale 1:100 | 图号 DWG NO. 30-B003701S-D0506-003 | 版本 REV. A

594X841

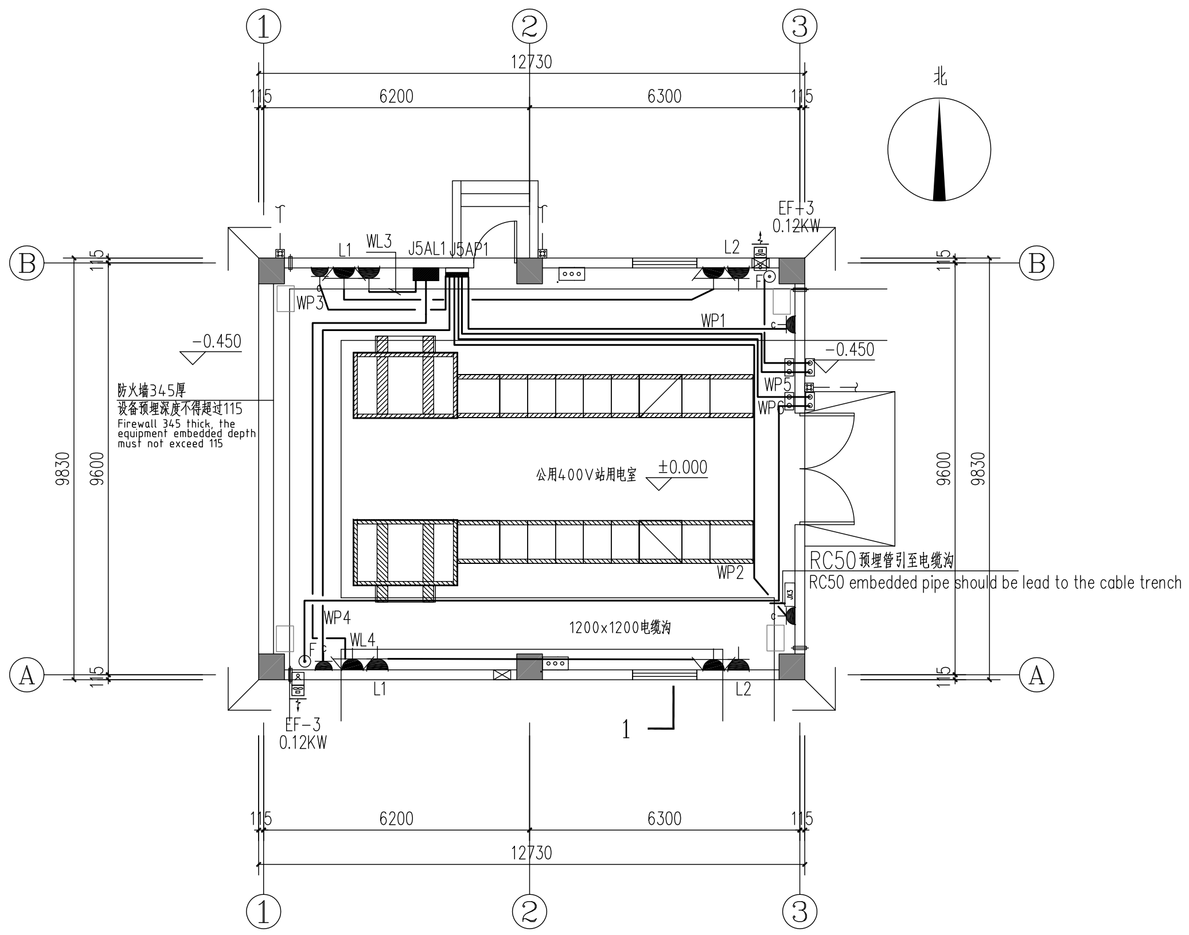


电力平面图 1:100

Electric power plan

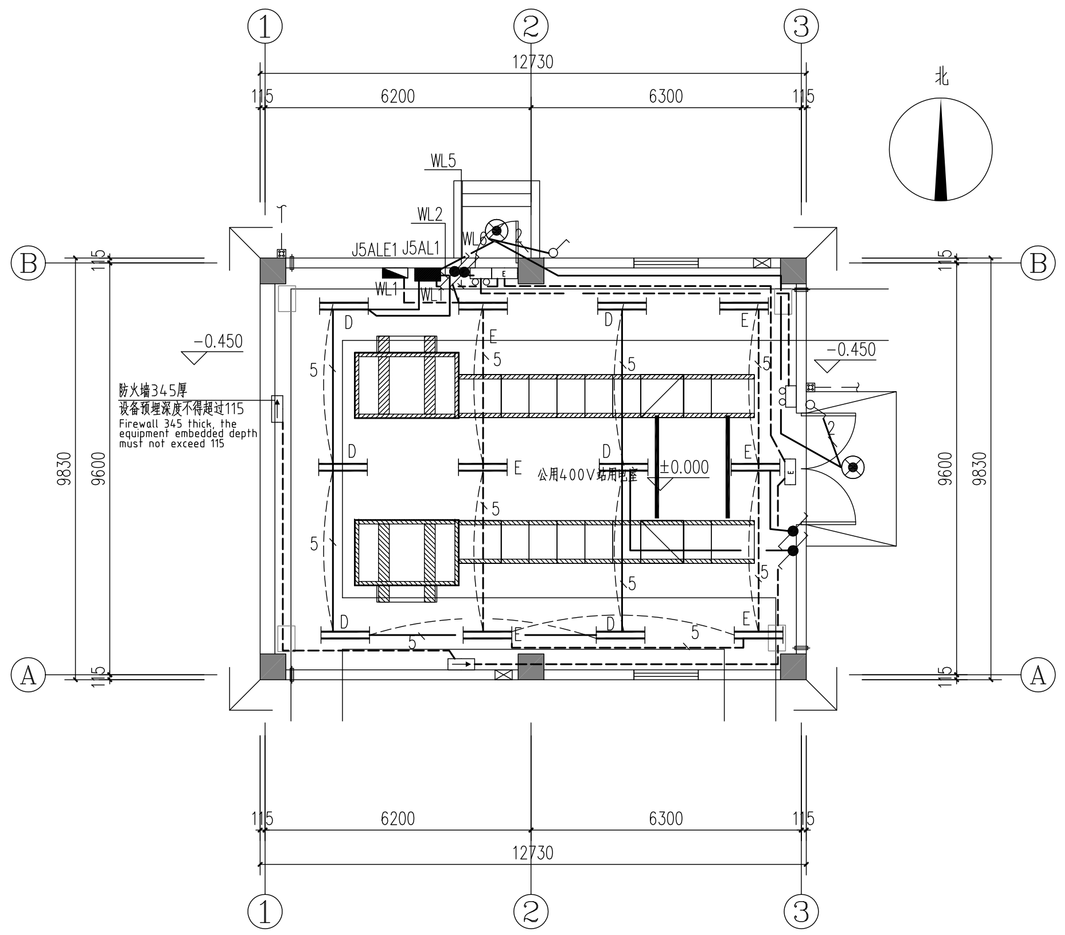


照明平面图 1:100

Lighting plan

注:

1、暖通配电箱底部分别预埋2RC50至就近电缆沟,埋管在电缆沟内高度为-0.6米。

2、400V站用电室门口内外各放一只轴流风机控制箱,每只控制箱配一套按钮("启动"和"停止"),并配有相应指示灯。室内外控制箱开关并联,可分别控制风机的启停。户外控制箱防护等级IP65。蓄电池室仅室外设置控制箱。

3、400V站用电室室内风机控制箱预埋PC20沿墙暗敷至风机接线盒。室外控制箱与室内控制箱预埋PC20连通。

4、空调、风机位置以暖通图纸为准,空调、风机用插座应配合空调、风机具体位置进行安装。

5、沿外圈电缆沟敷设100x50不锈钢电缆槽盒,供电线敷设用。

6、所有插座各埋管至室内电缆沟,单相插座旁标注的是该插座接入的相序,请按图施工以平均分配负荷。

7、电缆沟内强弱电管线分层敷设。

note:

1.2RC50 should be embedded from the bottom part of hvac distribution box to the nearest cable trench, and the height of buried pipe in the cable trench is -0.6 m.

2.A axial flow fan control box is placed inside and outside the door of the 400V station service house.Each control box is equipped with a set of buttons (" start "and" stop "), with corresponding indicator lights. The indoor and outdoor control box switch in parallel,The fan can be controlled separately. Outdoor control box protection class IP65. The battery room only has the control box outside.

3.The 400V station service house indoor fan control box embedded PC20 along the wall to the fan junction box.Outdoor control box and indoor control box should be Connected by embedded PC20.

4.The position of air conditioning and fan should be based on the hvac drawing, and the socket of air conditioner and fan should be installed in the position of air conditioning and fan.

5.A 100x50 stainless steel cable trough box is laid along the outer ring cable trench, and it is used for the laying of wire.

6.All the pipeline of sockets are buried in the indoor cable trench.The single phase of the socket is marked with the phase sequence of the socket, please click the construction to distribute the load evenly.

7.The power line and the Weak current line should be led layered in the cable trench.

注:

1、备用照明灯具及开关应作红色标签标记。

2、灯具线槽应避免与暖通空调碰撞,且避开空调出风口,以免出现冷凝水,施工时应结合暖通图纸一同施工。

3、照明配电箱和备用照明配电箱底部分别预埋2RC50至就近电缆沟,埋管在电缆沟内高度为-0.6米。

4、室内照明灯具采用杆吊线槽安装,每行线槽长度约10m,灯距地2.8m,吊杆安装请施工方根据现场情况定,应避开空调出风口;配电箱至灯槽用热镀锌钢管沿墙暗敷设。

5、线槽内应急照明回路电线应采用耐火蛇皮管封包。

6、同一回路不同开关控制的灯具应互不影响,施工时注意火线应在每个开关前分接出去至下一个开关。

7、所有布线埋管均需在转弯处设置弯头,转弯半径不小于15倍电线式电缆外径。

8、照明管线中电线芯数为3根的管线不标注。

note:

1.Standby lighting fixtures and switches should be marked with red label.

2.The lamp wire slote trough should avoid the collision with the hvac, and avoid the air-conditioner outlet, so as to avoid condensate water, the construction should be combined with the hvac drawing together

3.2RC50 should be embedded from the bottom part of Lighting distribution box and backup lighting distribution box to the nearest cable trench, and the height of buried pipe in the cable trench is -0.6 m.

4.The indoor lighting fixture is installed with the rod suspension wire slot, the length of each line groove is about 10m, and theight of the lamp is 2.8m .The installation of derrick shall be determined according to the conditions of the site.,and it should avoid air conditioner outlet.The distribution box to the lamp trough is covered with hot galvanized steel pipe.

5.The emergency lighting circuit in the slot shall be sealed with a refractory snake pipe.

6.The lamps of different switches in the same circuit shall not affect each other. Notice that the fire line should be connected to the next switch before each switch.

7.All wiring must be setted the elbow, at the corner,and the turning radius is not less than 15 times wire cable diameter

8.The wire in the lighting pipeline is not marked when the quantity of the wire is there.

Reference Drawings

| Drwg. No. | Title |
|---|---|
| | |

Revisions

| | Name | Date | Notes |
|---|---|---|---|
| | | | |

巴基斯坦默蒂亚里—拉合尔±660kV直流输电工程

±660kV HVDC Project from Matiari to Lahore in Pakistan

NATIONAL TRANSMISSION & DESPATCH COMPANY (NTDC) LIMITED PAKISTAN

CONTRACTOR 国家电网 STATE GRID 中国电力技术装备有限公司 CHINA ELECTRIC POWER EQUIPMENT AND TECHNOLOGY CO.,LTD.

SUBCONTRACTOR East China Electric Power Design Institute Co.,Ltd.

拉合尔±660kV换流站

±660kV Lahore Converter Station

设计阶段 PHASE: 施工图 Detail Design

MLHVDC-LCS-ECI-DD-EC-050 6-004A

| | 姓名 | 日期 |
|---|---|---|
| 设计 Designed | | 2018.2.8 |
| 校核 Checked | | 2018.2.8 |
| 审核 Reviewed | | 2018.2.8 |
| 批准 Approved | | 2018.2.8 |

电气平面图

Electrical plan

| 比例 Scale | 图号 DWG NO. | 版本 REV. |
|---|---|---|
| 1:100 | 30-B003701S-D0506-004 | A |

594X841

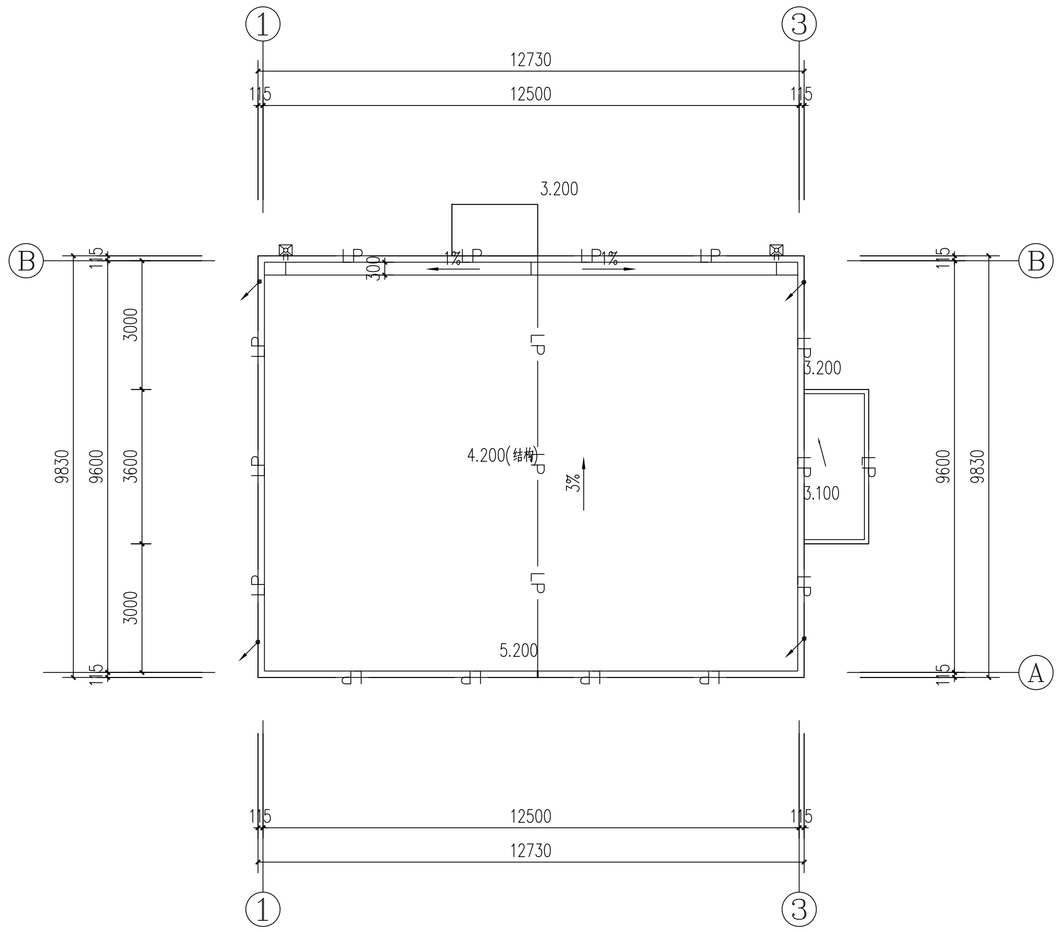


屋顶防雷平面图1:100

Roof lightning protection plan

1、在屋顶女儿墙上装设接闪带,并在屋面上装设不大于20m*20m (24m*16m)接闪网格.

2、本设计利用热镀锌圆钢Ø12作明敷接闪带，接闪带沿女儿墙外侧、屋脊、屋檐敷设。支持卡子间距为0.5米，转角处悬空段不大于 0.3米，接闪带高出屋面 0.2米，防雷带固定件采用Ø8热镀锌圆钢,L≈200mm。屋顶其它金属物、构筑物均须与接闪带连接且不得少于二处，不同材质的连接要有防电化腐蚀措施。

3、采用热镀锌扁钢(50*6)作为防雷引下线，沿墙柱暗敷，引至接地干线。每根引下线的冲击接地电阻应小于10欧姆，引至混凝土外的引下线采用热镀锌扁钢，焊接后应除去焊渣并在焊接处涂2道环氧富锌漆。并于引下线所在柱上端预埋一块100x100x8钢板，用于引下线与接闪带连接的转换点，引下线设置断接测试卡盒。

4、竖直敷设的金属管道及金属物顶端及底端均须与防雷装置连接。建筑物外墙面金属构件须与就近的防雷引下线连通，联结线采用热镀锌扁钢25*4沿墙暗敷。

5、利用金属栏杆作接闪带，其壁厚不小于2.5mm。

6、用护栏、警告牌使进入距引下线3m范围内地面的可能性减小到最低限度。

7、—— LP —— 热镀锌圆钢Ø12作明敷接闪带

Description:

1、Setting the air-termination system on the parapet wall of roof. And setting the air-termination system grid on the roof which size is not bigger than 20m*20m or(24m*16m).

2、This design use hot dip galvanized round steel (ø12) as the exposed laying air-termination system.The air-termination system is laid along the outside of the parapet , the ridge and the eave.The support card spacing for 0.5m.The suspension section of the corner should be not longer than 0.3 meters.The air-termination system shall be 0.15m higher than the roof,and the lightning protection belt fixed part adopts 8 galvanized round steel,L≈200mm.The other metal structures of the roof shall be connected to the air-termination system , and the connection shall be not less than two.The connection of different materials should have anti - corrosion measures.

3、Using the hot galvanizing flat steel(50*6) as lighting protection down-conductor system ,and it is led to the earth-termination system by being laid in the wall or column. The impact grounding resistance of every down-conductor system should be less than 10 ohms,the galvanized flat steel lead to the outside of concrete, should remove the slag and apply 2 epoxy zinc rich paint to the welding place after being welded.And embeding a steel plate which size is 100x100x8 in the column,that used to be the transfer point of the connection between the down-conductor system and the air-termination system.The down-conductor system should set the breaking test box.

4、The top and the end of the metal pipes and metal object which is laided verticall yshall be connected to the lightning protection system.The metal components on the building external wall shall be connected to the nearest lighting protection down-conductor system. The connection line adopts hot-dip galvanized flat steel (25 * 4) ,and be concealed laied alone wall.

5、Using metal balusters as air-termination system,and its wall thickness is not less than 2.5 mm.

6、Using guard bar and warning board , which can reduce the possibility that entering the groud where distance from the down-conductor system of 3m to a minumum.

7、—— LP —— the hot dip galvanized round steel (ø12) that is uesd as the exposed laying air-termination system

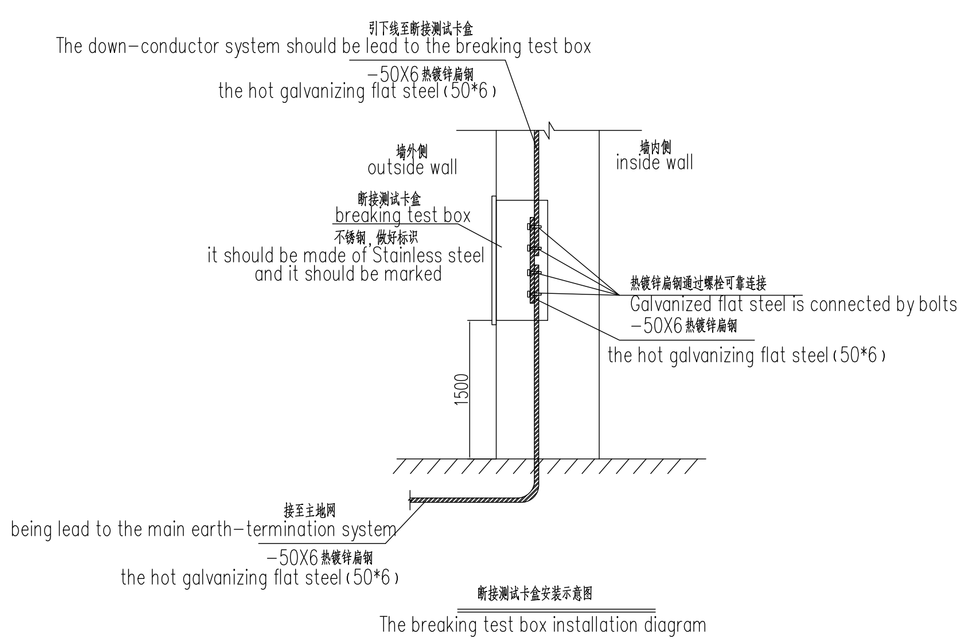


断接测试卡盒安装示意图

The breaking test box installation diagram

Reference Drawings

| Drwg. No. | Title |
|---|---|
| | |

Revisions

| | Name | Date | Notes |
|---|---|---|---|
| | | | |

巴基斯坦默蒂亚里—拉合尔±660kV直流输电工程

±660kV HVDC Project from Matiari to Lahore in Pakistan

NATIONAL TRANSMISSION & DESPATCH COMPANY (NTDC.) LIMITED PAKISTAN

CONTRACTOR 国家电网 STATE GRID 中国电力技术装备有限公司 CHINA ELECTRIC EQUIPMENT AND ENGINEERING CO.,LTD.

SUBCONTRACTOR East China Electric Power Design Institute Co.,Ltd.

拉合尔±660kV换流站

±660kV Lahore Converter Station

设计阶段 PHASE: 施工图 Detail Design

M L H V D C - L C S - E C I - D D - E C - 0 5 0 6 - 0 0 5 A

| | 姓名 | 日期 |
|---|---|---|
| 设计 Designed | | 2018.2.8 |
| 校核 Checked | | 2018.2.8 |
| 审核 Reviewed | | 2018.2.8 |
| 批准 Approved | | 2018.2.8 |
| 比例 Scale | | 图号 DWG NO. |

屋顶防雷平面图

Roof lightning protection plan

30-B003701S-D0506-005

版本 REV. A

594X841

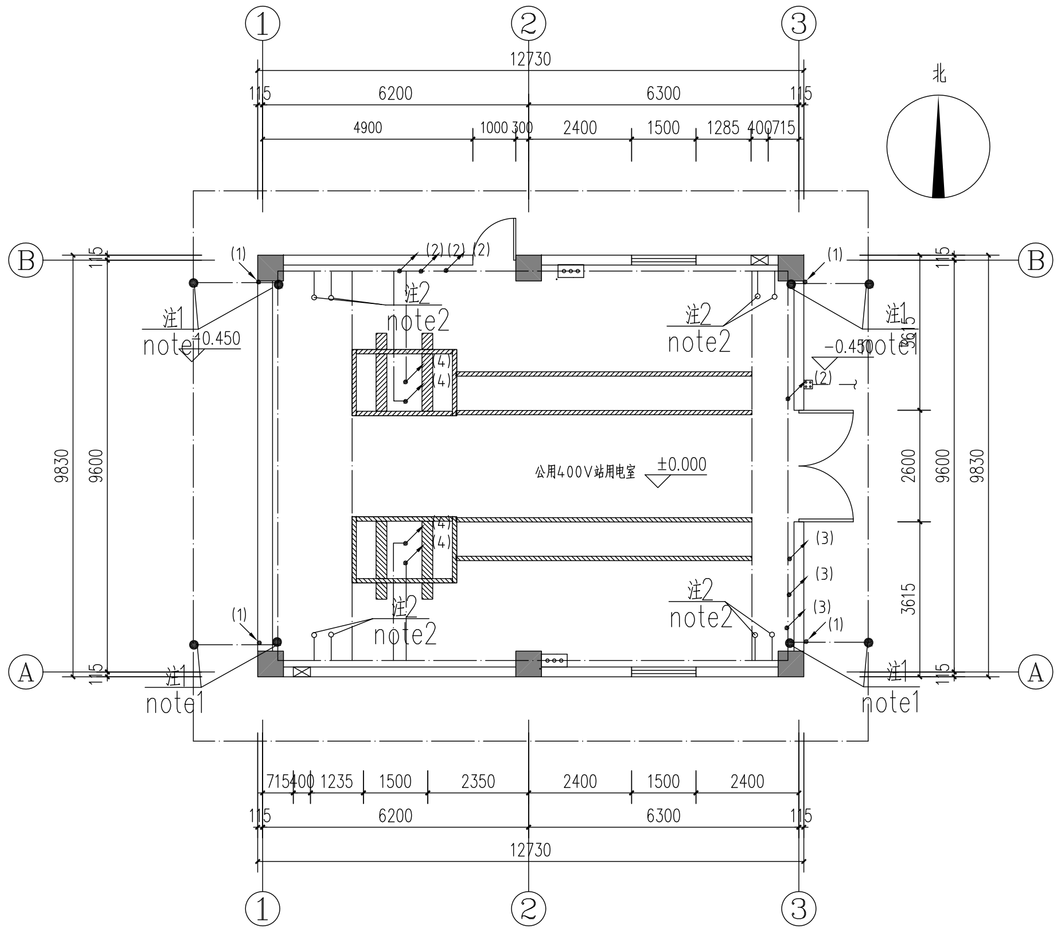


接地平面图 1:100

Earthing plan

图例

-------- 表示环房暗敷接地线，距建筑物1~1.5m，埋深为地下0.8m，并设垂直接地体（L=3m），具体设计详见其他卷册。

——·—— 表示热镀锌扁钢50*6，用作室内暗敷接地线，沿墙暗敷，距地0.2m，并与环房暗敷接地线连接。

防雷接地引下线 50x6热镀锌扁钢沿墙或柱子暗敷，与主接地网焊接，并与每层的户内环房接地干线可靠连接。

设备、等电位接地引上线

接地端子盒，距地0.3m，接地端子做法参见92DQ13防雷与接地装置图集

1、标号"(1)"：为防雷接地引下线

2、标号"(2)"：配电箱采用热镀锌扁钢25*4沿墙或柱子暗敷，与户内接地干线连接。

3、标号"(3)"：弱电箱采用热镀锌扁钢25*4沿墙或柱子暗敷，与户内接地干线连接。

4、标号"(4)"：干式变压器基础下方预留接地引上，从户内接地干线引接，采用-50x6热镀锌扁钢，露出电缆沟底500mm，供干式变压器接地使用。

5、屏柜基础槽钢采用50*6热镀锌扁钢与室内接地干线可靠连接。

6、室内电缆沟内通长扁钢应采用-50x6热镀锌扁钢与室内接地网可靠连接。

7、电缆支架应全部连通，且与本接地网的连接点不少于4点

8、继电器室的屏蔽网与室内环房接地网的焊接点不少于6处（均匀布置），且每处不少于5个焊接点，焊点的间距为200mm。

9、接地线穿过墙壁、楼板和地坪处需加装UPVC保护管，两端做好防水处理。

10、空调外机及室内各种金属构件（如金属门、窗，楼梯扶手，钢板，金属槽盒及爬梯等）均应采用-25x4热镀锌扁钢就近与室内接地干线或主接地网焊接。

11、金属门/窗扇与门/窗框之间应采用铜编织线连接

12、若铜绞线和镀锌扁钢的连接点在土壤中，需在连接点2m范围内，在铜绞线和镀锌扁钢上包裹沥青，以免发生腐蚀。

注1：室内接地干线利用50x6镀锌扁钢与环房暗敷接地线焊接

note1: the place where the indoor earth-termination system is welded with the earth-termination system around the building by using the hot-dip galvanized flat steel 50*6

注2：在每个房间的电缆沟内预留接地引上（位置及数量参见图纸），每处在电缆沟的两侧均预留接地引上点，从户内接地干线引接，采用-50x6热镀锌扁钢，露出电缆沟底500mm，供电缆沟支架接地使用

note2: To reserve earthing up point (position and quantity is shown in the plan) on either side of t the cable trench in each room,and it is come from the indoor earth-termination system by using the hot-dip galvanized flat steel 50*6,and it should be exposed out of the cable trench 500mm to be used for cable trench support.

legend:

-------- The earth-termination system buried at 0.8m underground around the building and it's 1 ~ 1.5m from the building, and setting the vertical earth electrode( L=3m). The detailed designs is shown in the other volume.

——·—— using the hot-dip galvanized flat steel 6*50 that is laid in the wall and its lower edge isapart from the ground 0.2 m as the indoor earth-termination system.And the Indoor earth-termination system should be electrical connected with the earth-termination system around the building.

Lightning protection down-conductor using the hot galvanizing flat steel 50*6 that is laid in the wall or column ,and it should be connected with the main earth-termination system and the indoor earth-termination system on each floor.

Electrical equipment, equipotential earthing up wire

earth terminal box,its lower edge isapart from the ground 0.3 m The Main Equipotential Bonding method is shown in 92DQ13 lightning protection and grounding device atlas

1、The label "(1)":Lightning protection down-conductor system

2、The label "(2)": The distribution box should be led to be welded with the indoor earth-termination,by using the hot galvanized flat steel 25*4 that is laied in the column or wall.

3、The label "(3)": The weak current box setting should be led to be welded with the indoor earth-termination system by using the hot galvanized flat steel 25*4 that is laied in the column or wall.

4、The label "(4)": To reserve earthing up point below the dry type transformer foundation,and it is come from the indoor earth-termination system by using the hot-dip galvanized flat steel 50*6,and it should

5、The base channel of the screen should be welded with the indoor earth-termination system by 50*6 hot galvanized flat steel .

6、The flat steel in the indoor cable trench should be connected with the indoor grounding network by using the -50x6 hot galvanizing flat steel

7、All the cable bracket shall be connected with each other and the connection point between the cable bracket the and earth-termination system shall not be less than 4 points .

8、The welding point of the relay room and indoor earth-termination system is not less than 6 (uniform

9、The earthing line should be installed with UPVC protection tube when it through the wall and floor.

10、The outside air conditioning machineAll and kinds of metal components indoor (metal doors, Windows, stair handrails, Steel plate, metal tank and the metal ladder etc.) shall be welded with the indoor earth-termination system or the main earth-termination system by using -25x4 hot galvanizing flat steel.

11、Metal door/window/ frame should be connected with each other by using the copper braided wire .

12、If the connection point of the copper strand and galvanized flat steel is in the soil,it is necessary to wrap asphalt on copper strand and galvanized flat steel to avoid corrosion,within 2m of the connection point.

Reference Drawings

| Drwg. No. | Title |
|---|---|
| | |

Revisions

| | Name | Date | Notes |
|---|---|---|---|
| | | | |

巴基斯坦默蒂亚里—拉合尔±660kV直流输电工程

±660kV HVDC Project from Matiari to Lahore in Pakistan

NATIONAL TRANSMISSION & DESPATCH COMPANY (NTDC) LIMITED PAKISTAN

CONTRACTOR 国家电网 STATE GRID 中国电力技术装备有限公司 CHINA ELECTRIC EQUIPMENT AND TECHNOLOGY CO.,LTD.

SUBCONTRACTOR East China Electric Power Design Institute Co.,Ltd.

拉合尔±660kV换流站

±660kV Lahore Converter Station

设计阶段 PHASE: 施工图 Detail Design

MLHVDC-LCS-ECI-DD-EC-050 6-006A

| | 姓名 | 日期 |
|---|---|---|
| 设计 Designed | | 2018.2.8 |
| 校核 Checked | | 2018.2.8 |
| 审核 Reviewed | | 2018.2.8 |
| 批准 Approved | | 2018.2.8 |

接地平面图

Earthing plan

比例 Scale | 图号 DWG NO. 30-B003701S-D0506-006 | 版本 REV. A

594X841

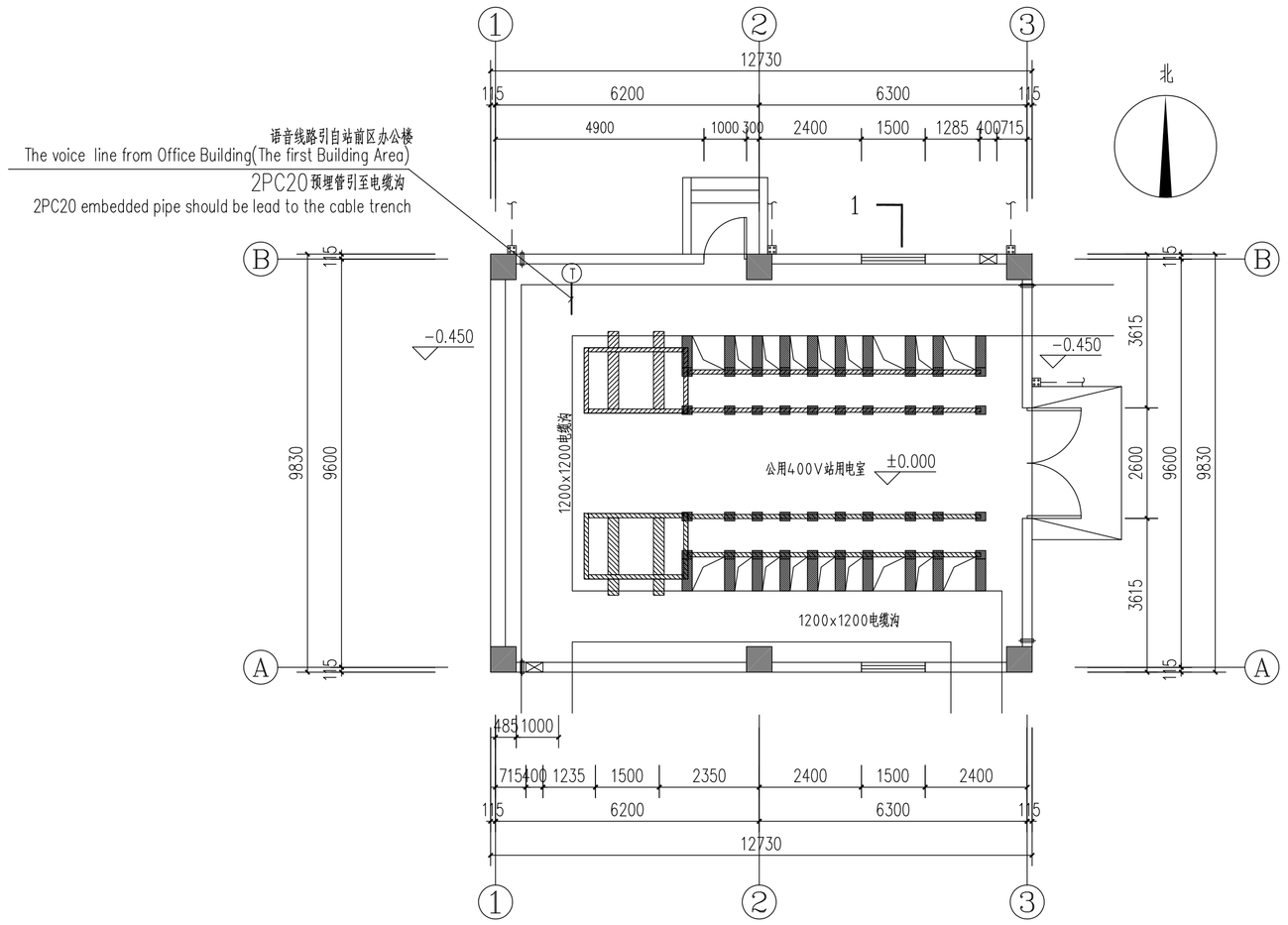


弱电平面图 1:100

Weak current plan

注：电缆沟内强弱电管线分层敷设。

note: The power line and the Weak current line should be led layered in the cable trench.

## 弱电图例

Weak current legend

| 图例 legend | 设备名称 Equipment name | 型号及规格 Model and specification | 安装方式 way to install |
|---|---|---|---|
| FX | 电话分线盒 telephone distribution box | 高*宽*深(Height * width * depth): 350x450x150 | 下口距地1.5m its lower edge isapart from the ground 1.5 m |
| T | 电话插座 The phone socket | 预埋86H60接线盒 pre-embedded 86H60 terminal box | 暗装,下口距地 0.3m concealed installation, its lower edge isapart from the ground 0.3 m |

Reference Drawings

| Drwg. No. | Title |
|---|---|
| | |

Revisions

| Name | Date | Notes |
|---|---|---|
| | | |

巴基斯坦默蒂亚里—拉合尔±660kV直流输电工程

±660kV HVDC Project from Matiari to Lahore in Pakistan

NATIONAL TRANSMISSION & DESPATCH COMPANY (NTDC) LIMITED PAKISTAN

CONTRACTOR 国家电网 STATE GRID 中国电力技术装备有限公司 CHINA ELECTRIC POWER TECHNOLOGY EQUIPMENT CO.,LTD.

SUBCONTRACTOR East China Electric Power Design Institute Co.,Ltd.

拉合尔±660kV换流站

±660kV Lahore Converter Station

设计阶段 PHASE: 施工图 Detail Design

MLHVDC-LCS-ECI-DD-EC-050 6-007 A

| | 姓名 | 日期 |
|---|---|---|
| 设计 Designed | 李佳 | 2018.2.8 |
| 校核 Checked | 吴炜华 | 2018.2.8 |
| 审核 Reviewed | 张治方 郑理 | 2018.2.8 |
| 批准 Approved | 张治方 李建辉 | 2018.2.8 |

弱电平面图及图例

Weak current plan and Weak current legend

比例 Scale: 图号 DWG NO.: 30-B003701S-D0506-007 版本 REV.: A

594X841

# 电气材料表
## Electrical material list

| 图例 legend | 设备名称 Equipment name | 型号及规格 Model and specification | 数量 quantity |
|---|---|---|---|
| | RC管 RC conduit | φ50 | 30m |
| | 电缆 Cable | BV-4*6+E6 | 40m |
| | PC管 PC conduit | φ32 | 40m |
| | 电线 Wire | BV-4*4+E4 | 60m |
| | PC管 PC conduit | φ25 | 60m |
| | 电线 Wire | BV-2*2.5+E2.5 | 40m |
| | 电线 Wire | BV-4*2.5+E2.5 | 45m |
| | 电线 Wire | N-BV-2*2.5+E2.5 | 40m |
| | 电线 Wire | N-BV-3*2.5+E2.5 | 50m |
| | PC管 PC conduit | φ20 | 90m |
| | RC管 RC conduit | φ20 | 90m |
| | SPD1 | | 1 |
| | SPD2 | | 2 |
| | 断路器 Circuit breaker | GSH204-C40 300mA 0.3s YO | 1 |
| | | GSH204-C32 300mA 0.3s YO | 1 |
| | | S202-C16 | 1 |
| | | GSH204-D16/30mA/0.1S | 5 |
| | | GSH204-D10/30mA/0.1S | 3 |
| | | GSH204-D20/30mA/0.1S | 3 |
| | | GSH204-D25/30mA/0.1S | 0 |
| | | S201-C10 | 5 |
| | | S202-C10 | 2 |
| | 电力线槽 electric power trunking | 100x50 | 45m |
| | 热镀锌圆钢 the hot dip galvanized round steel | ø12/ø8 | 70m/28m |
| | 镀锌扁钢 the hot-dip galvanized flat steel | 50x6 | 110m |
| | 镀锌扁钢 the hot-dip galvanized flat steel | 25x4 | 35m |
| | 断接测试卡盒安装示意图 The breaking test box installation diagram | | 4 |
| | 螺栓 bolts | | 16 |
| | 灯具线槽 luminaires trunking | 50x50 | 30m |
| | 接地端子盒 earth terminal box | | 2 |
| | 放热焊点 Exothermic Welding point | 扁钢与接地线焊接点 Welding point of flat steel and the earth-termination system | 19 |
| | 轴流风机控制箱 Axial flow fan control box | | 2 |
| | 铜编织线 Braided copper wire | $10mm^2$ | 42m |
| | UPVC保护管 UPVC protection tub | | 22m |

| 图例 legend | 设备名称 Equipment name | 型号及规格 Model and specification | 数量 quantity |
|---|---|---|---|
| | 照明配电箱 lighting distribution box | | 1 |
| | 照明配电箱 lighting distribution box | | 1 |
| | 暖通配电箱 hvac distribution box | | 1 |
| | 出口指示灯 exit sign lighting | 光源LED 3W(自带蓄电池) light source: LED 3w(Built-in battery) | 2 |
| | 方向指示灯 escape sign lighting | 光源LED 3W(自带蓄电池) light source: LED 3w(Built-in battery) | 2 |
| | 单管荧光灯 single tube fluorescent lamp | 32W | 0 |
| | 双管荧光灯 double tube fluorescent lamp | 2 x 32W | 0 |
| E | 双管荧光灯(备用照明) double tube fluorescent lamp (Standby lighting) | 2 x 32W | 6 |
| D | 双管荧光灯(自带蓄电池) double tube fluorescent lamp (Built-in battery) | 2 x 32W | 6 |
| | 吸顶灯(防水型) Suction lamp (waterproof type) | 1*18W | 2 |
| | 遥视灯控箱 viewing light control box | 300x250x150 | 1 |
| | 壁灯 Wall lamp | 36W | 0 |
| E,EX | 壁灯(备用照明,防爆) Wall lamp(Standby lighting Explosion proof ) | 36W | 0 |
| | 插座(三相四极安全型) socket (Three-phase quadrupole safety type) | 380V,16A | 4 |
| EX | 插座(防爆)(三相四极安全型) socket(Explosion proof ) (Three-phase quadrupole safety type) | 380V,16A | 0 |
| | 二,三极单相组合插座(安全型) The diode triode single phase combinated socke(safety type) | 250V,10A | 4 |
| EX | 二,三极单相组合插座(防爆) The diode triode single phase combinated socke(Explosion proof ) | 250V,10A | 0 |
| c | 柜式空调插座(三相四极安全型) The Cabinet air-conditioner socket (Three-phase quadrupole safety type) | 380V,16A | 4 |
| EX c | 柜式空调插座(三相四极)(防爆) The Cabinet air-conditioner socket (Three-phase quadrupole )(Explosion proof ) | 380V,16A | 0 |
| F | 风机接线盒 Fan terminal box | 380V 10A | 2 |
| | | | |
| | 应急灯 emergency lamp | 2*23W(自带蓄电池) 2*23W(Built-in battery) | 2 |
| | 单联单控开关 single connection planet single control switch | 250V,10A | 0 |
| EX | 单联单控开关(防爆) single connection planet single control switch (Explosion proof ) | 250V,10A | 0 |
| | 双联单控开关 two connection planet single control switch | 250V,10A | 0 |
| | 双联双控开关 two connection planet double control switch | 250V,10A | 0 |
| | 单联双控开关 single connection planet double control switch | 250V,10A | 4 |
| | 单联单控开关(IP54安全型) single connection planet single control switch (IP54 safety type) | 250V,10A | 2 |
| | 双联单控开关(IP54安全型) two connection planet single control switch (IP54 safety type) | 250V,10A | 0 |

注:

note:

1、本建筑物空调插座采用国标，公共区域插座国标和巴方标准每房间各安装一半原则实施，最终实施方案以业主及监理要求为准。

1、In this building,the air conditioning socket adopts Chinese standard; the electrical sockets in the public areas and each room according to the implementation principle that one half adopt Chinese standard and anothet half adopt Pakistani standard ,and the final implementation plan should be subject to the requirements of the owner and the supervisor.

2、开列材料均由乙方提供

2、All the materials shall be provided by party B

3、此材料表设备具体数量统计仅供参考。

3、The quantity of equipment in this material table is for reference only.

# 弱电材料表
## Weak current Material list

| 图例 legend | 设备名称 Equipment name | 型号及规格 Model and specification | 数量 quantity | 施工方 contractor | 安装方式 way to install |
|---|---|---|---|---|---|
| | RC管 RC conduit | φ50 | 0 | 土建施工单位 civil engineering construction unit | |
| | 6芯光缆 six core optical fiber cable | | 0 | 机电安装单位 Electromechanical installation unit | 详见系统图和平面图 See system diagram and the plan |
| | 25对三类UTP电缆 25 pairs of UTP cables | | 0 | 机电安装单位 Electromechanical installation unit | 详见系统图和平面图 See system diagram and the plan |
| | 语音线路 The voice line | | 8m | 机电安装单位 Electromechanical installation unit | 详见系统图和平面图 See system diagram and the plan |
| | RC管 RC conduit | φ32 | 0 | 土建施工单位 civil engineering construction unit | |
| | PC管 PC conduit | φ20 | 16m | 土建施工单位 civil engineering construction unit | |
| FX | 电话分线盒 telephone distribution box | 高*宽*深(Height * width * depth): 350x450x150 | 0 | 机电安装单位 Electromechanical installation unit | 下口距地 1.5m its lower edge isapart from the ground 1.5 m |
| T | 电话插座 The phone socket | 预埋86H60接线盒 pre-embedded 86H60 terminal box | 1 | 机电安装单位 Electromechanical installation unit | 暗装,下口距地 0.3m concealed installation, its lower edge isapart from the ground 0.3 m |

Reference Drawings

| Drwg. No. | Title |
|---|---|
| | |

Revisions

| | Name | Date | Notes |
|---|---|---|---|
| | | | |

巴基斯坦默蒂亚里—拉合尔±660kV直流输电工程

±660kV HVDC Project from Matiari to Lahore in Pakistan

NATIONAL TRANSMISSION & DESPATCH COMPANY (NTDC) LIMITED PAKISTAN

CONTRACTOR 国家电网 STATE GRID 中国电力技术装备有限公司 CHINA ELECTRIC POWER EQUIPMENT AND ENGINEERING CO.,LTD.

SUBCONTRACTOR East China Electric Power Design Institute Co.,Ltd.

拉合尔±660kV换流站

±660kV Lahore Converter Station

设计阶段 PHASE: 施工图 Detail Design

M L H V D C - L C S - E C I - D D - E C - 0 5 0 6 - 0 0 8 A

| | 姓名 | 日期 |
|---|---|---|
| 设计 Designed | | 2018.2.8 |
| 校核 Checked | | 2018.2.8 |
| 审核 Reviewed | | 2018.2.8 |
| 批准 Approved | | 2018.2.8 |

材料表

Material list

| 比例 Scale | 1:100 | 图号 DWG NO. | 30-B003701S-D0506-008 | 版本 REV. | A |
|---|---|---|---|---|---|

594X841